GATE VALVE TECHNICAL DATA

MATERIAL & GENERAL SPECIFICATIONS

	1½" (50mm)	2" (63mm or 75/90mm)	3" (90mm)	4" (110mm)	6"/8" (160/200mm)	10" / 12" (250/315mm)
Color	White or Black (Gray)	White or Black (Gray)	White or Black (Gray)	White (Gray)	White (Gray)	White (Gray)
Hubs	PVC or ABS (PVC)	PVC or ABS (PVC)	PVC or ABS (PVC)	PVC (PVC)	PVC	PVC
Body	PVC or ABS (PVC)	PVC or ABS (PVC)	PVC or ABS (PVC)	PVC (PVC)	ABS	ABS
Shaft	304SS	304SS	304SS	304SS	304SS	304SS
Paddle	Polypro	Polypro or 304SS	Polypro or 304SS	304SS	304SS	304SS
Handle	Plastic or Die Cast Al	Plastic or Die Cast Al	Plastic or Die Cast Al	Die Cast Al	304SS	304SS
Seals	Sarlink	Sarlink	Sarlink	Sarlink	Sarlink	Sarlink
Max PSI Open/Closed	30/45	20/40	15/15	15/15	6/10	6/8
Mid-Flow Max Closing Pressure	6 psi	5 psi (PP) 10 psi (SS)	.5 psi (PP) 9 psi (SS)	7 psi	2.5 psi	2.5 psi
Air Cylinder	Reinforced Nylon	Metal or Reinforced Nylon	Metal or Reinforced Nylon	Metal	Metal	Metal

Notes:

Vacuum Applications: 1½" to 4" tested to 26 Hq in. when requested by customer

Metric Valves are Gray PVC

MANUAL VALVE DIMENSIONS (Inches)(mm)

Size	A	B	C	D	E	F
1.5 ABS	6.5	8.625	2.896	1.912	3.9375	2.875
1.5 PVC	6.5	8.625	2.896	1.913	3.9375	3.375
50mm	168	222	72.6	50.3	98	98
2 ABS	7.5	10.25	3.364	2.388	4.5	3.125
2 PVC	7.5	10.25	3.37	2.387	4.5	3.5
63mm	191	260	85.4	63.3	111	105
75/90mm	238	324	111	75.3	130	133
3 ABS	9.25	13	4.35	3.518	5.1875	4.5
3 PVC	9.25	13	4.37	3.516	5.1875	4.5
90mm	238	324	111	90.3	130	133
4 PVC	13.25	18	6.665	4.518	7.4375	5.1875
110mm	330	454	169	110.4	181	130
6 PVC	22.75	31.125	11.1	6.647	13.25	11.125
160mm	572	800	279.4	160.7	343	279
8 PVC	22.75	31.125	11.1	8.655	12.1875	13.75
200mm	572	797	279.4	200.7	327	276
10 PVC	35	48.5	18.475	10.78	19.625	13.75
250mm	889	1232	469.3	251	514.4	341.3
12 PVC	35	48.5	18.475	12.78	18.625	15.375
315mm	889	1232	469.3	316	485.8	409

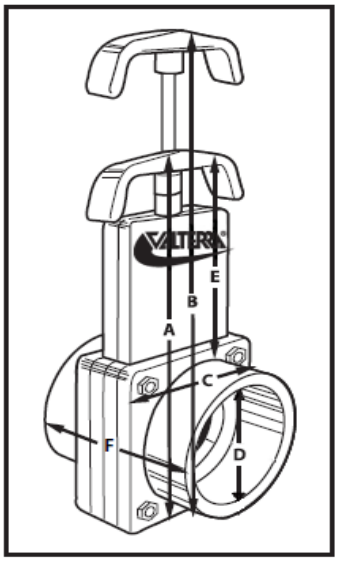

"B" Dimension is height of valve in fully open position

GATE VALVE TECHNICAL DATA

PNEUMATIC VALVE - ALUMINUM/STAINLESS STEEL AIR CYLINDER DIMENSIONS (Inches)(mm)

Size	A	B	C	D	E	Air Tubing Size	Recomm. Operating Pressure	Cylinder Air Volume
2	12.5	8.5	3.364	2.388	3	1/4"	55-70 psi	1.209 in³
63mm	318	216	85.4	63.3	105	1/4"	55-70 psi	1.209 in³
3	15.5	11.25	4.35	3.518	4.5	1/4"	55-70 psi	1.662 in³
90mm	394	286	111	90.3	133	1/4"	55-70 psi	1.662 in³
4	19.5	13.25	6.665	4.518	5	1/4"	55-70 psi	1.742 in³
110mm	489	337	169	110.4	130	1/4"	55-70 psi	1.742 in³
6	33	24	11.1	6.647	11.125	1/4"	90-120 psi	19.36 in³
160mm	838	610	279.4	160.7	279	1/4"	90-120 psi	19.36 in³
8	33	22.75	11.1	8.655	13.75	1/4"	90-120 psi	19.36 in³
200mm	838	590	279.4	200.7	276	1/4"	90-120 psi	19.36 in³
10	50	34	18.475	10.78	13.1	1/4"	100-130 psi	51.08 in³
12	50	33	18.475	12.78	15.375	1/4"	100-130 psi	51.08 in³

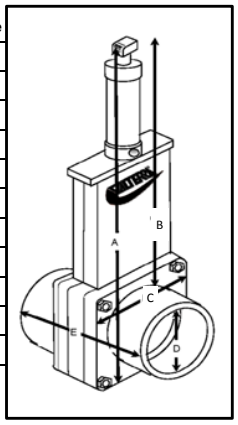

Note: Aluminum/SS Air Cylinders assembled with Air Restrictor - removal of restrictor voids warranty
Cylinder working temperature: 40°F - 140°F

PNEUMATIC VALVE - REINFORCED NYLON PLASTIC AIR CYLINDER DIMENSIONS (Inches)(mm)

Size	A	B	C	D	E	Air Tubing Size	Recomm. Operating Pressure	Cylinder Air Volume
1.5	10	7.375	2.896	1.912	2.875	I.D. 4 mm x O.D. 6 mm	60-75 psi	1.196 in³
50mm	254	187	72.6	50.3	98	I.D. 4 mm x O.D. 6 mm	60-75 psi	1.196 in³
2	11	8	3.364	2.388	3	I.D. 4 mm x O.D. 6 mm	60-75 psi	1.196 in³
63mm	279	203	85.4	63.3	105	I.D. 4 mm x O.D. 6 mm	60-75 psi	1.196 in³
3	13	8.5	4.35	3.518	4.5	I.D. 4 mm x O.D. 6 mm	60-75 psi	1.196 in³
90mm	330	216	111	90.3	133	I.D. 4 mm x O.D. 6 mm	60-75 psi	1.196 in³

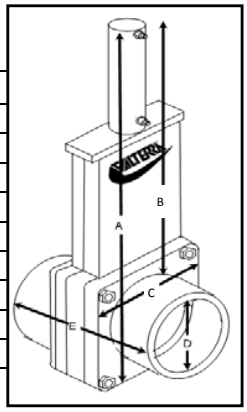

Note: Cylinder working temperature: 40°F - 140°F

CEMENT

VALVE FITTING	PIPE	SIZE	CEMENT
ABS	PVC	1.5-6"	Use IPS #794 or equivalent
ABS	ABS	1.5-3"	Use IPS #771 or equivalent
PVC	ABS	1.5-6"	Use IPS #794 or equivalent
PVC	PVC	1.5-12"	Use IPS #717 or equivalent

STATIC HEAD PRESSURE

Feet Head	PSI
1	0.43
3	1.03
6	2.6
9	3.9
12	5.2
15	6.51
20	8.66
30	12.99
40	17.32
50	21.65

► Feet Head to PSI, multiply by 0.434

► PSI to Feet Head, multiply by 2.3

VALVE MAX WORKING TEMPERATURE

Material	Suggested Maximum Working Temperature	
ABS	205° F	96° C
PVC	167° F	75° C
PC	280° F	137° C

Phone: 800-806-6159 Fax: 818-361-5389 email: valterra@valterra.com www.valterra.com

GATE VALVE TECHNICAL DATA

4"/110mm RUST-FREE PADDLE VALVE

MATERIAL & GENERAL SPECIFICATIONS				
Part#	8441	8441S16	6441	6441S16
Size	110mm	110mm	4”	4”
Color	Gray	Gray	White	White
Hubs	PVC	PVC	PVC	PVC
Body	PVC	PVC	PVC	PVC
Shaft	304 Stainless Steel	316 Stainless Steel	304 Stainless Steel	316 Stainless Steel
Paddle	Polypropylene	Polypropylene	Polypropylene	Polypropylene
Handle	Heavy Duty Plastic	Heavy Duty Plastic	Heavy Duty Plastic	Heavy Duty Plastic
Seals	Sarlink	Sarlink	Sarlink	Sarlink
Max PSI Open/Closed	15/15	15/15	15/15	15/15
Mid-Flow Max Closing Pressure	6 PSI	6 PSI	6 PSI	6 PSI

MANUAL VALVE DIMENSIONS						
Size	A	B	C	D	E	F
4”	13.25”	18”	6.665”	4.518”	7.4375”	5.1875”
110mm	330mm	454mm	169mm	110.4mm	181mm	130mm

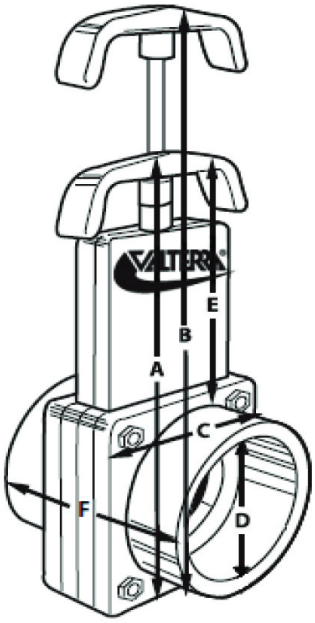

“B” Dimension is height of valve in fully open position

U.S. Patent 9,845,890

Phone: 800-806-6159 Fax: 818-361-5389 email: valterra@valterra.com www.valterra.com